# JBF Stainless Steel Expansion Joint

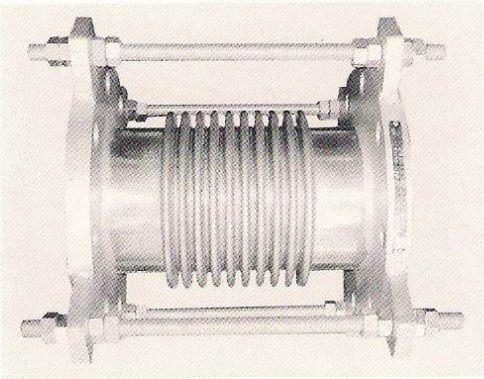

**Application:** Water, Steam, Turbines, Gas, Fuel Oil, Air, etc.

**Max. Working Temperature :** 220°C

**Max. Working** Pressure : 10 and 16 Kgf/cm$^2$

## CONSTRUCTION

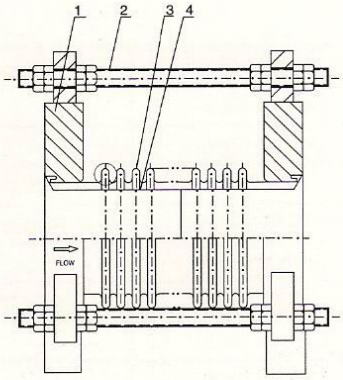


| No. | Parts | Materials | Option |
|---|---|---|---|
| ① | Flange | Carbon Steel | |
| ② | Shipping Rod | Carbon Steel | |
| ③ | Bellows | SUS 304 | SUS 316/SUS 321 |
| ④ | Sleeve | SUS 304 | SUS 316/SUS 321 |

## SPECIFICATION

| Model (Code) | Nominal Diameter {mm (inch)} | Overall Length (mm) | Axial Movement (mm) | Working Pressure (Kgf/cm$^2$) |
|---|---|---|---|---|
| JBF20F | 20 (3/4) | 300 | +20 / -40 | 10/16 |
| JBF25F | 25 (1) | 300 | +20 / -40 | 10/16 |
| JBF32F | 32 (1.1/4) | 300 | +20 / -40 | 10/16 |
| JBF40F | 40 (1.1/2) | 300 | +20 / -40 | 10/16 |
| JBF50F | 50 (2) | 300 | +20 / -40 | 10/16 |
| JBF65F | 65 (2.1/2) | 300 | +20 / -40 | 10/16 |
| JBF80F | 80 (3) | 300 | +20 / -40 | 10/16 |
| JBF100F | 100 (4) | 300 | +20 / -40 | 10/16 |
| JBF125F | 125 (5) | 300 | +20 / -40 | 10/16 |
| JBF150F | 150 (6) | 300 | +20 / -40 | 10/16 |
| JBF200F | 200 (8) | 300 | +20 / -40 | 10/16 |
| JBF250F | 250 (10) | 300 | +20 / -40 | 10/16 |
| JBF300F | 300 (12) | 300 | +20 / -40 | 10/16 |
| JBF350F | 350 (14) | 300 | +20 / -40 | 10/16 |
| JBF400F | 400 (16) | 300 | +20 / -40 | 10/16 |
| JBF450F | 450 (18) | 300 | +20/ -40 | 10/16 |
| JBF500F | 500 (20) | 300 | +20 / -40 | 10/16 |
| JBF600F | 600 (24) | 300 | +20 / -40 | 10/16 |

**Remarks :** Higher pressure rating available on request.
Larger size, various length & axial movement available on request.